ROHS

http: //www.okhro.com

技术说明：此产品防水等级：IP-X7.

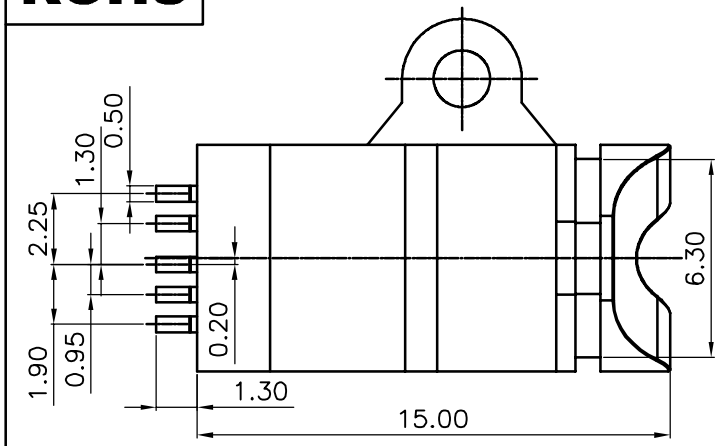

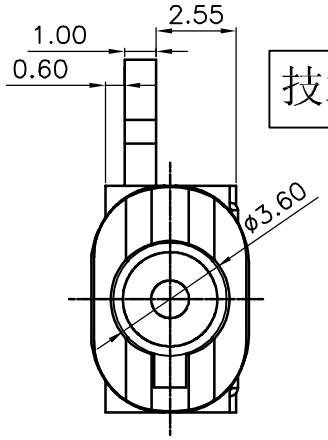

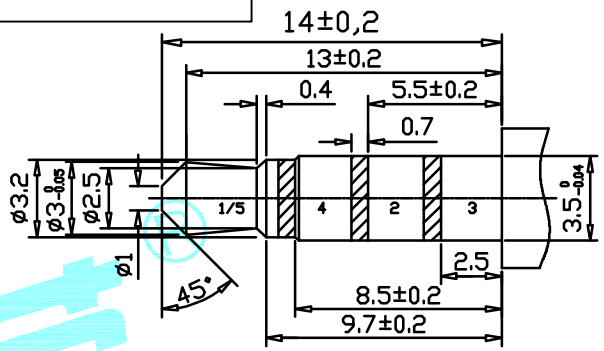

MATE PLUG

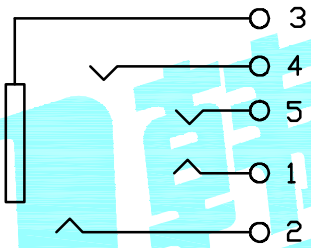

CIRCUIT DIAGRAM

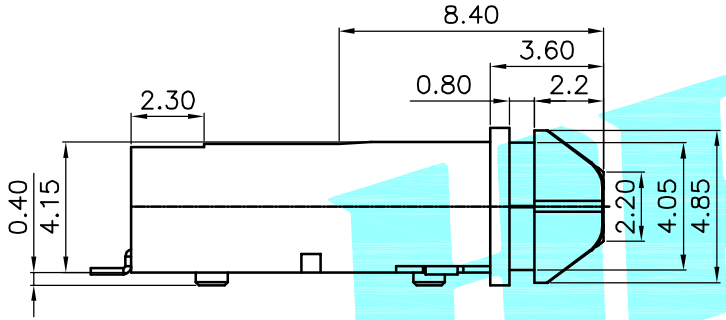

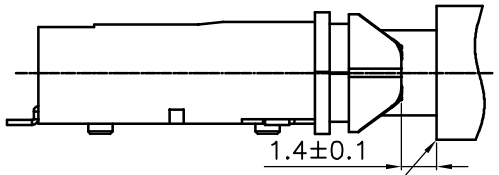

完全插入插头后，插座前端与插头根部间距尺寸

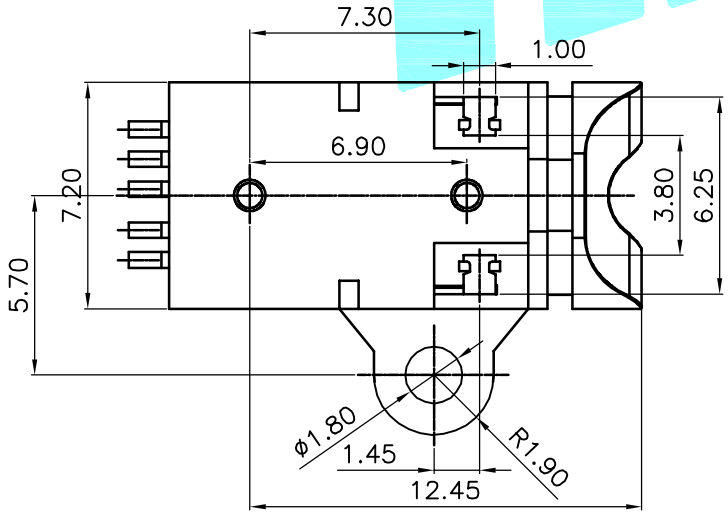

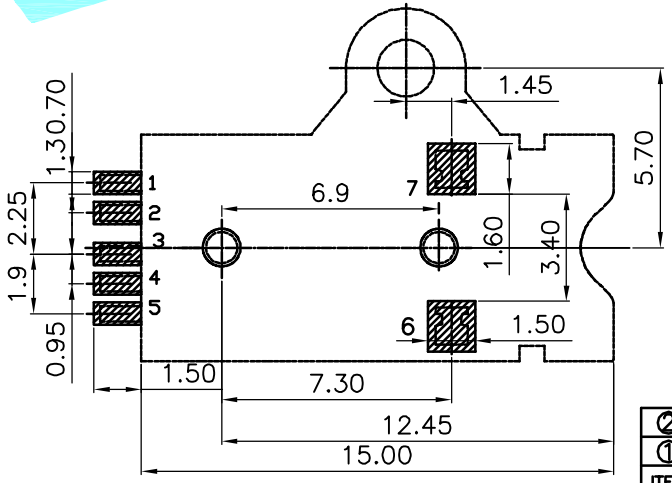

P.C.B LAYOUT

Rating:0.5A 30V DC
Contact Resistance:100 mΩ Max.
Operating temperature:−20℃~70℃
Operating force:3−20N
Operating Life:5,000cycles

ITEM	PART NAME	TER'NO.	QTY.	MATERIAL	FINISHING	REMARK
②	Terminal	——	5	Phosphor bronze	Au Plating	——
①	Housing	——	1	Nylon	Black	——

APPROVALS		DATE	HRO韩荣® ELECTRONICS CO.,LTD		
DRAWN	xu qi feng	2014.12.06			
CHECKED			TITLE:	PHONE JACKES	
APPROVALS			PART NO.	PJ−601	
TOLERANCES ARE	30~以上 ±0.30; 10~30 ±0.20; 5~10 ±0.15; ~5 ±0.10; ANGLE ±2°		UNIT: mm	SCALE: 1:1	PROJ.
			DRAWING NO.	——	SHEET 1 OF 1

ECN NO.	REV.	DATE.	DESCRIPTION.	CHANGE.	CHECK.	APPRO.
——	A	——	NEW	——	——	——