ROHS

http://www.okhro.com

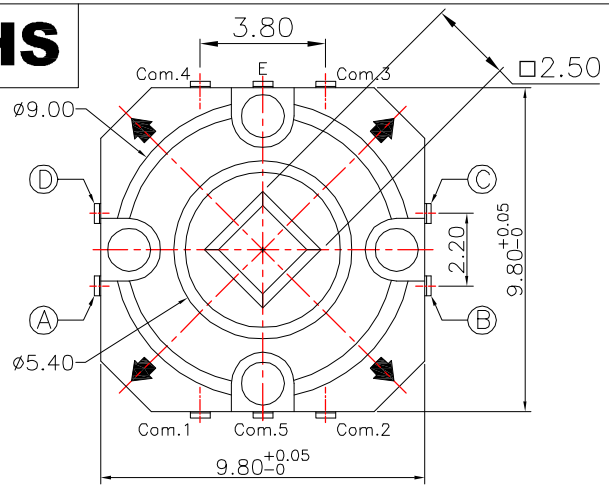

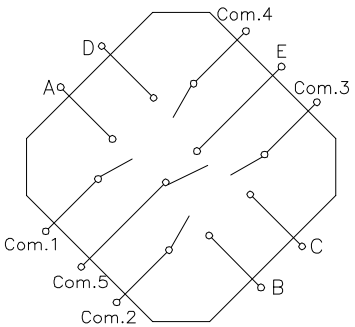

Circuit Diagram

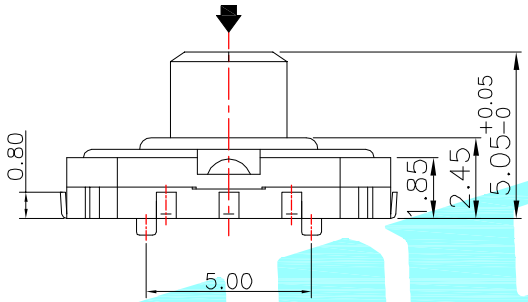

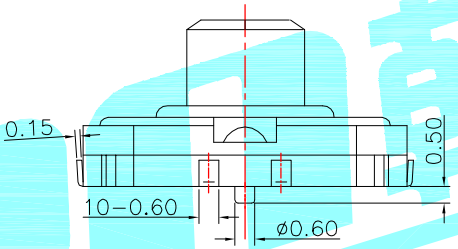

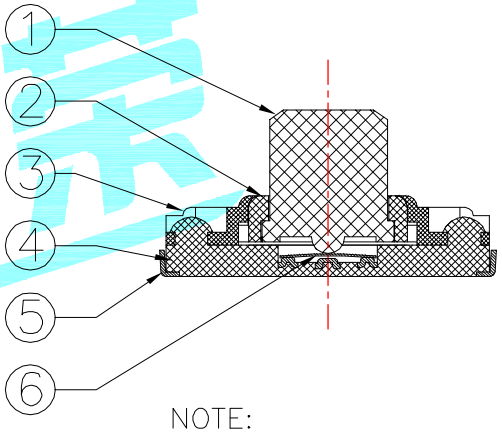

NOTE:
Operating Force:
4−direction 160 ± 35 gf
center push 250 ± 35 gf

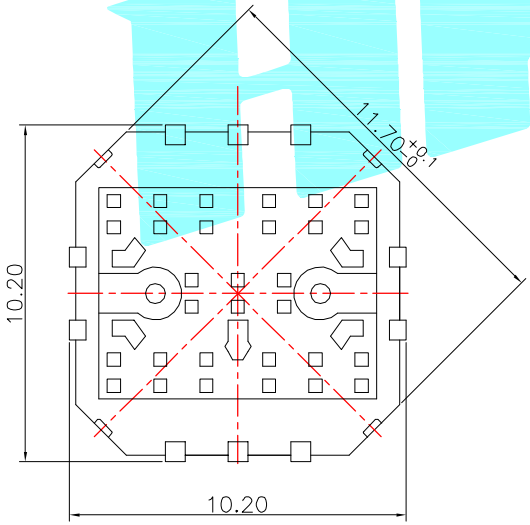

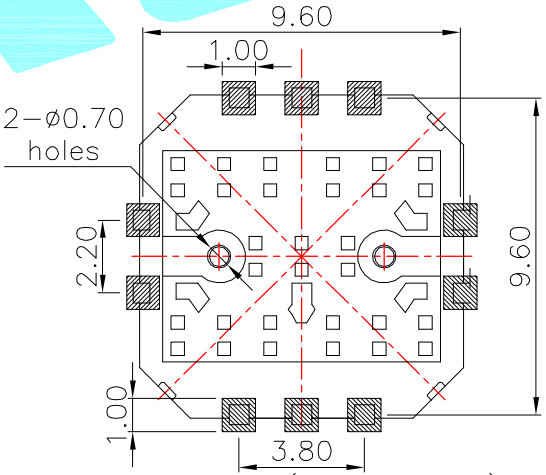

PCB Layout(Pattern Side)

ITEM	PART NAME	TER'NO.	QTY.	MATERIAL	FINISHING	REMARK
⑦	Dust cover	——	1	Kapton film	Yellow	——
⑥	Contact	——	5	F.Ag/SUS	——	——
⑤	Terminal	——	10	Brass(0.15t)	Plating silver	——
④	Base	——	1	LCP	Black	
③	Cover	——	1	LCP	Black	——
②	Axle sleeve	——	1	LCP	Black	——
①	Keystoke	——	1	PA46	Black	——

APPROVALS		DATE
DRAWN	J.X.Zhang	2013/7/30
CHECKED		
APPROVALS		

HRO韩荣® ELECTRONICS CO.,LTD

TITLE:	MULTIFUNCTIONAL SWITCHS
PART NO.	K1−1509UA−01
UNIT: mm	SCALE: 1:1
DRAWING NO.	——
PROJ:	SHEET 1 OF 1

TOLERANCES ARE			ANGLE
	30~以上	±0.30	±2°
	10~30	±0.20	
	5~10	±0.15	
	~ 5	±0.10	

ECN NO.	REV.	DATE.	DESCRIPTION.	CHANGE.	CHECK.	APPRO.
——	A	——	NEW	——	——	——